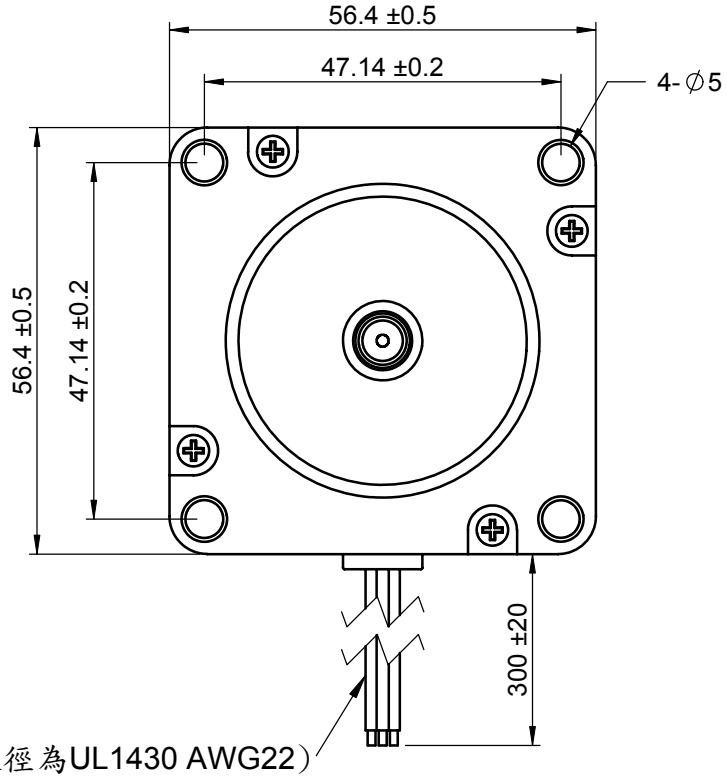

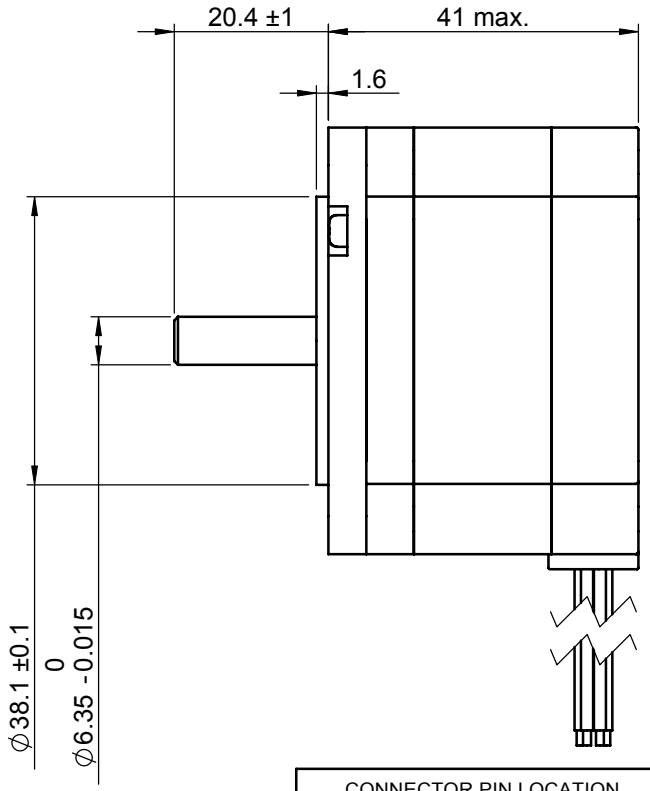

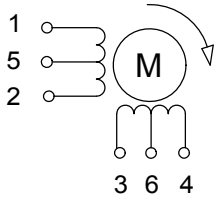

CONNECTOR PIN LOCATION					
PIN	COLOR	CCW ⟵ ⟶ CW			
1	BLACK	+	-	-	+
2	GREEN	-	+	+	-
3	RED	+	+	-	-
4	BLUE	-	-	+	+
5	YELLOW				
6	WHITE				

註：以雙極性驅動板測試

MODEL		Motor Characteristics					
JH57-E0G1A767		Resistance	Step Angle	Steps Revolution	Max PIT Rate	Max POT Rate	POT(at300pps)
Constant current	24V 0.5 A	5.7Ω	1.8 °	200	800PPS	1200PPS	4130g-cm

THIRD ANGLE PROJECTION	製圖	JOANNE	Cheshire Electric Company,LLC		
ALL DIMENSION ARE IN MM (UNLESS OTHERWISE SPECIFIED)	設計		Part No JH57-E0G1A767		
	審核	Adam			
	材料		Name HB stepper motor	REV. NO.	B
繪製比例： 1:1	完成時間	2012/9/14			